FTO

FALCONCLAW THERMAL OVERLAY

USER MANUAL · 2026

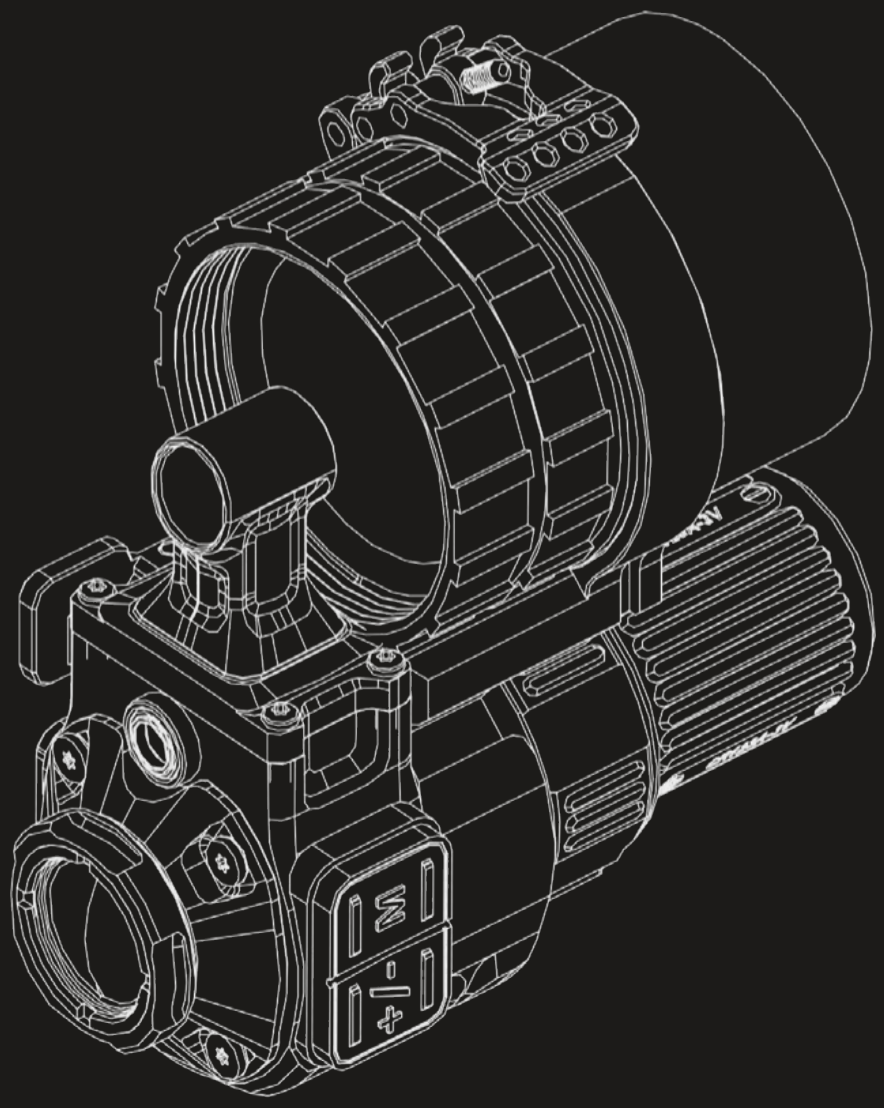

FALCONCLAW

SCAN THE QR

WATCH IT OPERATE

Because reading about it is not enough.



CONTENTS

IN THIS MANUAL

01	Safety	04
02	In the box	05
03	Know your FTO	06
04	Buttons	08
05	Batteries	09
06	Mounting on the NVD	11
07	Battery pack and GPS	12
08	The screen	13
09	Menu	15
10	Specifications	17
11	Troubleshooting	19

01 SAFETY

NEVER POINT THE LENS AT THE SUN
Direct sun, lasers and other strong heat sources damage the thermal sensor. This also applies when the FTO is off.

KEEP AWAY FROM CHILDREN
Small parts can come loose and a child can swallow them.

DAMAGED DEVICE OR BATTERY
Stop using it. Send the FTO to Falconclaw service for repair.

CARE AND STORAGE

HANDLING	Hard knocks can damage the internal battery.
HEAT	Keep the FTO away from fire and high temperatures.
TEMPERATURE	−40 °C to +60 °C (−40 °F to +140 °F)
COLD	Battery capacity decreases in the cold. This is normal.
STORAGE	Keep the FTO in a dry, well-ventilated place.
POWER SUPPLY	Examine it for damage before use. Do not use defective parts. Keep it dry.

02 IN THE BOX

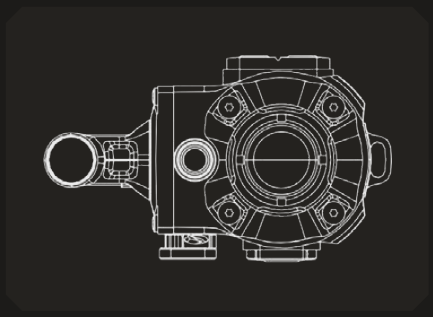

THERMAL IMAGER

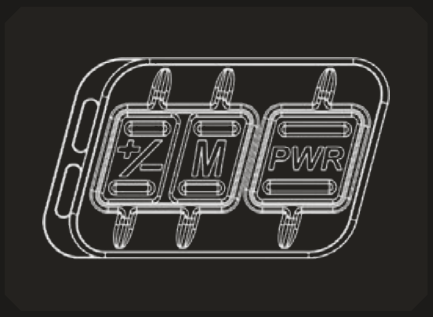

REMOTE CONTROL

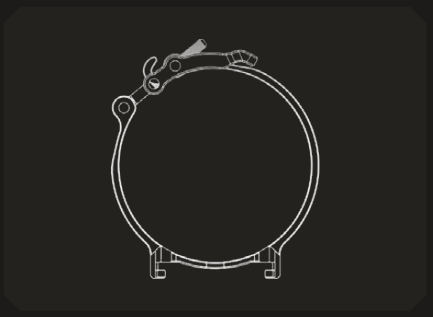

NVD MOUNTING BRACKET

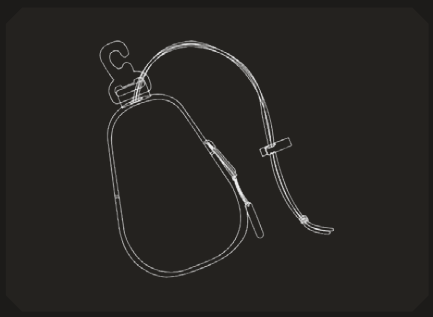

POUCH

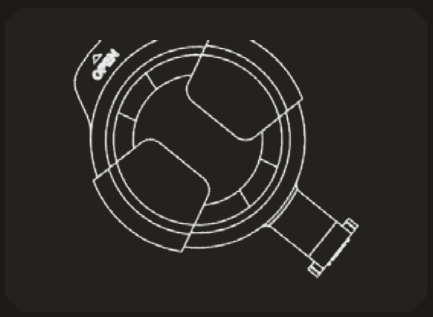

LENS COVER

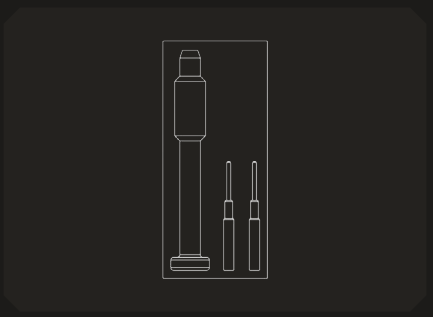

SCREWDRIVER KIT

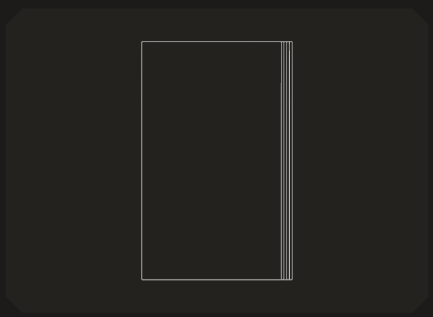

USER MANUAL

Not included: CR123A battery and the optional battery pack with GPS module. Examine the box contents before first use.

03 KNOW YOUR FTO

The FTO is a clip-on thermal imager. It attaches to the objective lens of your night vision device and adds the thermal picture to the night vision picture. You do not need to calibrate the optics.

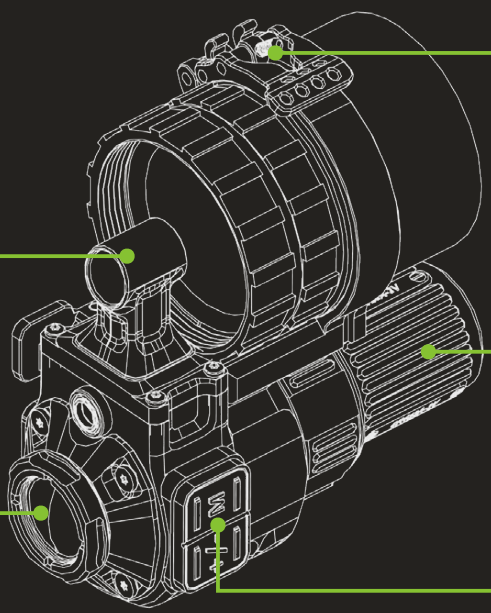

BRACKET LOCK
Clamps on NVD

EYEPIECE
Projects into NVD

BATTERY COVER
1 × CR123A

OBJECTIVE LENS
Thermal, F/1.0

BUTTONS
See 04

AT A GLANCE

FITS	PVS-14, RNVG, DTNVS, 1431, PVS-31A, GPNVG
POWER	1 × CR123A: 3 h · battery pack: 10 h · fusion from 10 m

03 PARTS

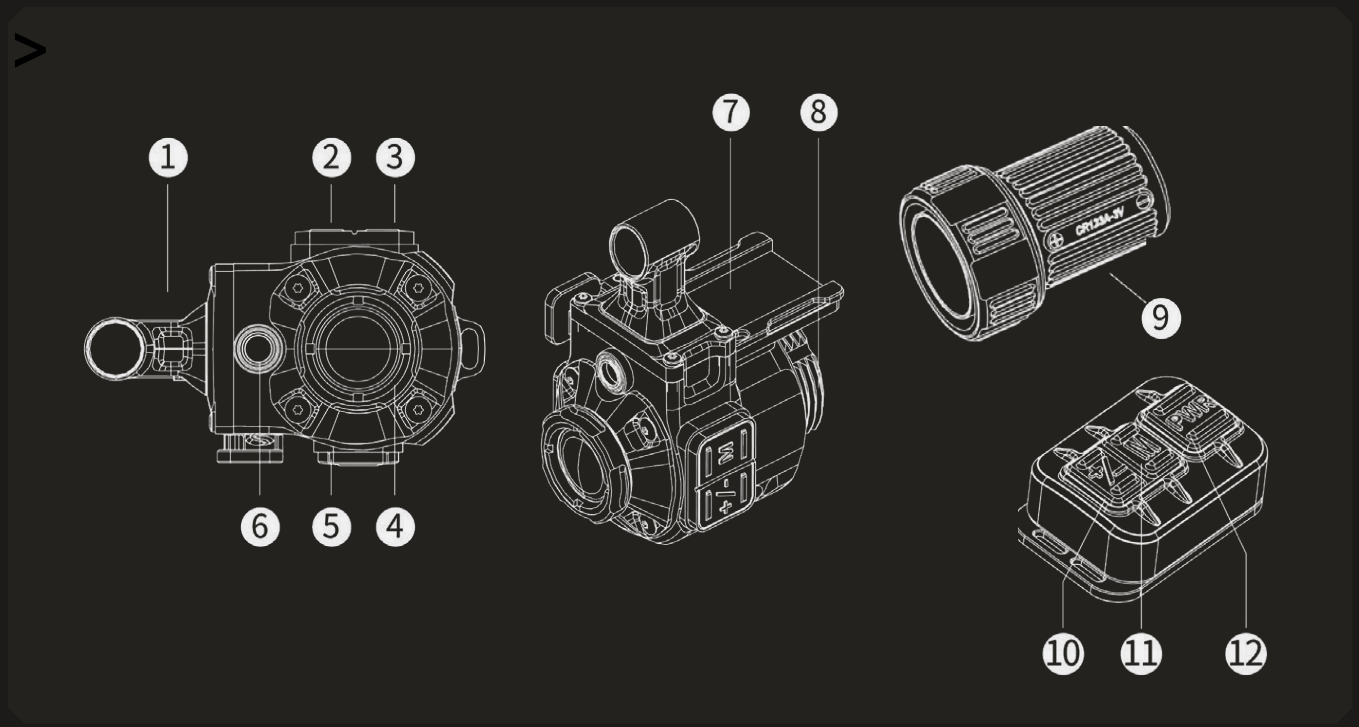

DEVICE	
1	Eyepiece
2	M button (mode)
3	± button
4	Objective lens
5	PWR button
6	Sensor window

DEVICE + REMOTE	
7	Bracket interface
8	Battery interface
9	CR123A battery cover
10	Remote: ± button
11	Remote: M button
12	Remote: PWR button

04 BUTTONS

ON THE DEVICE

BUTTON	PRESS	HOLD
ON THE MAIN SCREEN		
PWR	Shutter correction (NUC)	Off
M	Highlight / Outline	Open the menu
±	Change the value	Next: brightness, threshold, frequency
IN THE MENU		
PWR	Shutter correction (NUC)	Off
M	Next item	Exit the menu
±	Change the setting	none
SWITCHED OFF		
PWR	none	On

You can give PWR press another function: **Menu › PWR Custom**.

PAIR THE REMOTE

1. Press **PWR** on the remote. The red light flashes.
2. Hold **M** + **±** for 6 s. The green and red lights flash.
3. Green stays on: paired. Needed only if the FTO does not respond.

05 BATTERIES

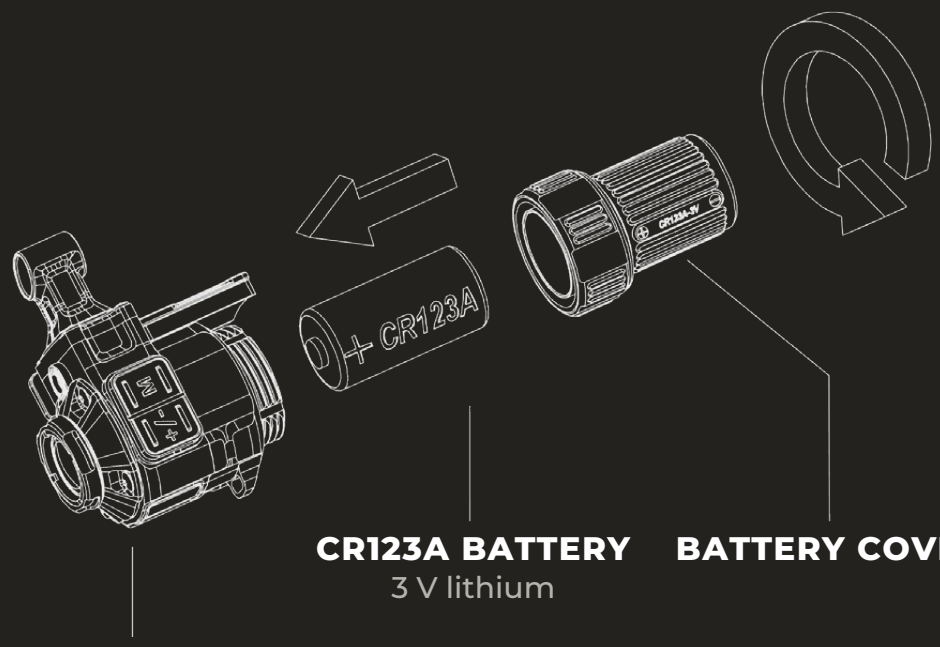

INSTALL THE CR123A

1. Turn the battery cover counterclockwise and remove it.
2. Put one CR123A (3 V) into the battery cover as shown.
3. Install the cover and turn it clockwise until it is tight.

INSTALL THE BATTERY CORRECTLY
An incorrectly installed battery can damage the FTO.

05 REMOTE BATTERY

The remote control has a CR2032 battery installed. A spare CR2032 is in the box.

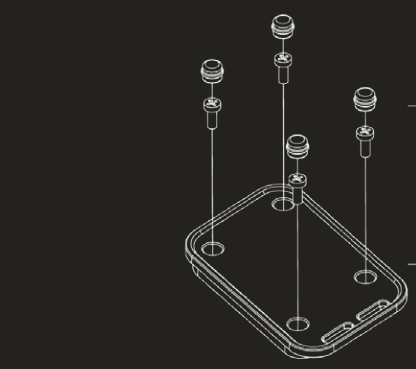

SCREWS
4 × with seal caps

UPPER COVER

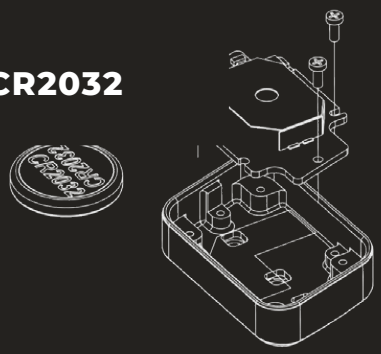

CR2032

CIRCUIT BOARD

LOWER SHELL

REPLACE THE CR2032

1. Remove the 4 seal caps and the 4 screws.
2. Remove the upper cover. Lift out the circuit board.
3. Replace the CR2032. Assemble in the opposite order.

06 MOUNTING

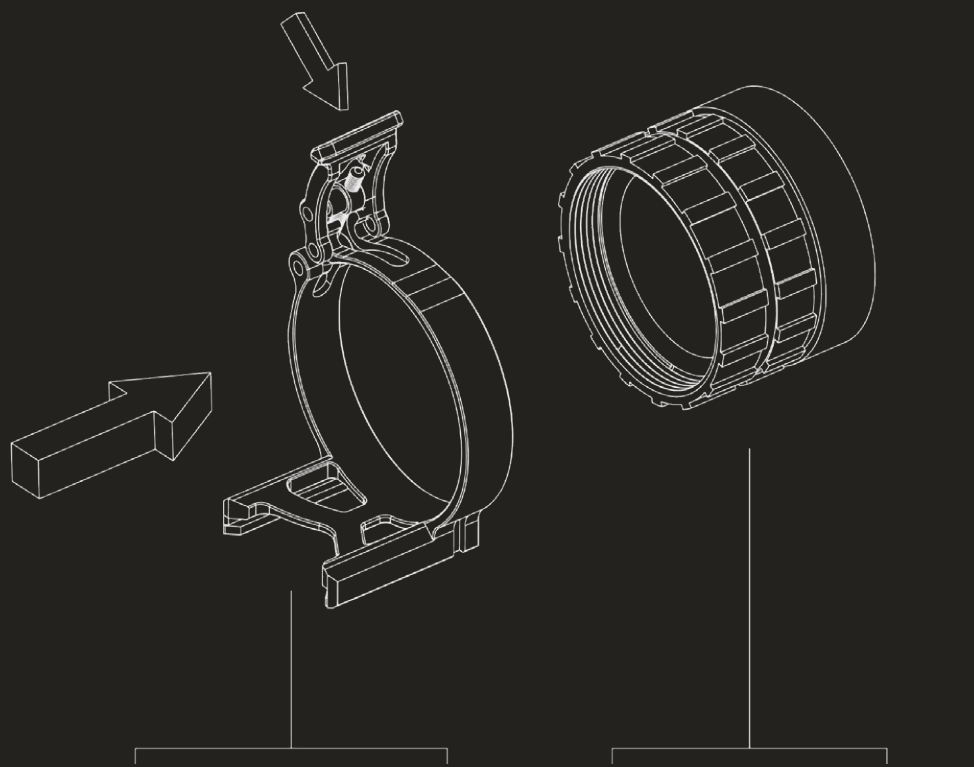

INSTALL THE BRACKET

1. Put the mounting bracket on the objective lens of the NVD.
2. Turn the buckle to adjust the tightness.
3. Push the buckle down to lock the bracket.

The bracket fits objective lenses with a diameter of 36.5 to 37.5 mm.

07 BATTERY PACK

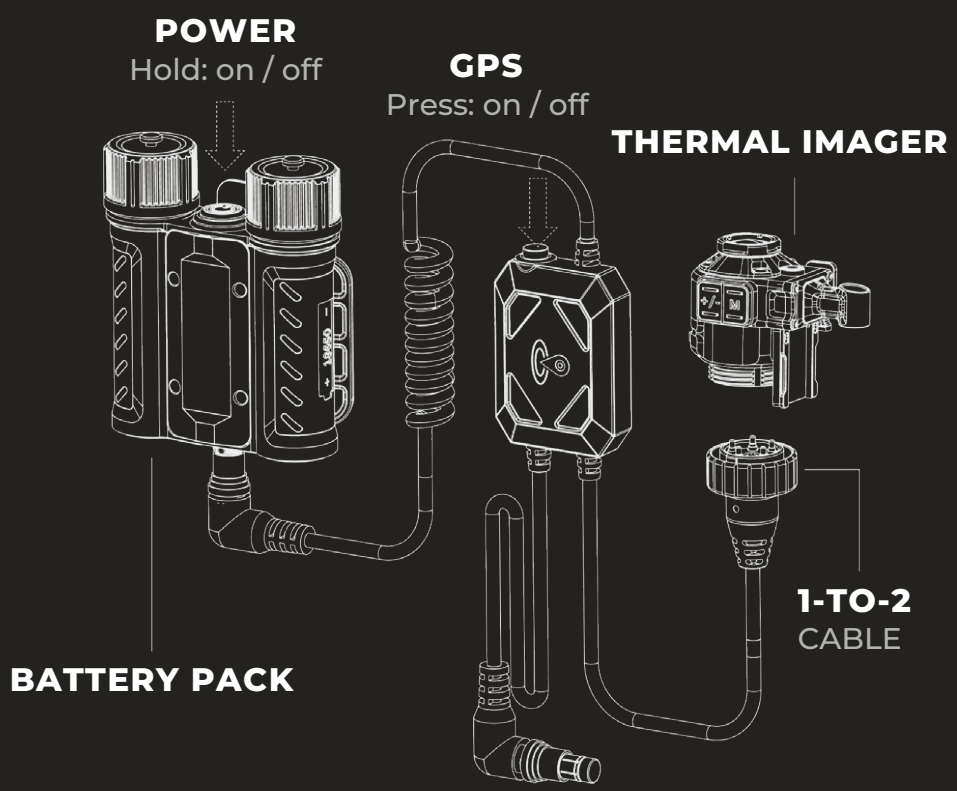

CONNECT

1. Connect the battery pack, the GPS module and the FTO with the cables as shown.
2. Hold the button on the battery pack to switch the power on or off.
3. Use the button on the GPS module to switch GPS on or off.

GPS works best in the open with a clear view of the sky.

08 THE SCREEN

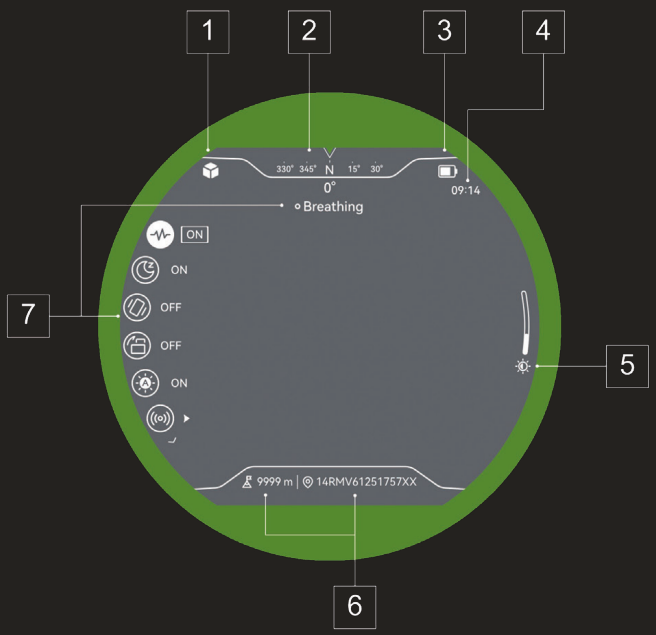

STATUS BAR

1	**Image mode:** Highlight or Outline
2	**Compass:** heading
3	**Battery:** charge level
4	**Time:** when the GPS cable is connected
5	**Quick adjustment:** brightness, frequency, threshold
6	**GNSS:** position, when the GPS cable is connected
7	**Menu** (see 09)

08 IMAGE MODES

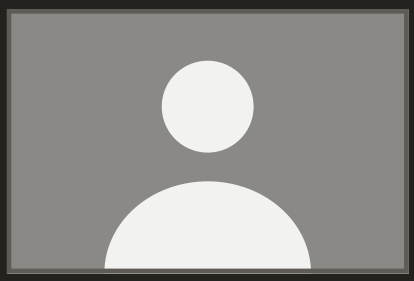

THERMAL
Normal picture



HIGHLIGHT
Target filled



OUTLINE
Target edges

HIGHLIGHT AND OUTLINE

HIGHLIGHT	The target shows as a full white shape. The threshold sets which heat is shown: 100 % to 10 %.
OUTLINE	Only the edges of the target show. Use it to see details. Threshold: 100 % to 10 %.
THRESHOLD	Set it for the conditions. Press **±** on the main screen, hold **±** to select threshold.

QUICK ADJUSTMENT

BRIGHTNESS	Brightness of the thermal picture
FREQUENCY	Pulse speed when Breathing is on
THRESHOLD	How much heat shows in Highlight and Outline

09 MENU

Hold **M** to open the menu. Press **M** to go to the next item. Press **±** to change it. Hold **M** to exit.

MAIN MENU

BREATHING	On / off. Highlight and Outline pulse. Set the speed with Frequency.
DORMANCY	On / off. The thermal picture stops. Sensor data, for example the compass, stays on.
AUTO STANDBY	On / off. Sleep after 1 min without movement. Off after 10 min.
FLIP SLEEP	On / off. Sleep when you flip the FTO up. Off after 10 min.
AUTO BRIGHTNESS	On / off. Screen brightness adjusts automatically. Manual adjustment stays possible.
SAVE AND EXIT	Saves the settings and closes the menu.

09 MENU

CONNECTIONS

COMPASS	Standard: full display. NO: simple display. AC: calibrate the compass. OFF: compass off.
BLUETOOTH	On / off
EXIT	Saves and goes back one level

SETTINGS

PWR CUSTOM	Function of PWR press: correction, breathing, dormancy or auto brightness.
INTERFACE	Menu always on the screen: on / off
OUTLINE	Line thickness: 3/3, 2/3, 1/3
CALIBRATION	Image offset calibration
PAL OUT	Video output: on / off
AUTO CORRECTION	Automatic shutter correction: on / off
UTC ±	Set the time zone
INFORMATION	Software version
RESET	Factory settings
EXIT	Saves and goes back one level

10 SPECIFICATIONS

DETECTOR AND OPTICS

DETECTOR	640 × 512, 12 µm
APERTURE	F/1.0
MAGNIFICATION	1×
FIELD OF VIEW	35° × 30° (H × V)
RECOGNITION	275 m (target 1.7 × 0.5 m, P(n) = 99 %)

IMAGE AND FUNCTIONS

IMAGE MODES	Highlight, Outline. Adjustable threshold
AUTOMATIC	ABC, auto shutdown, auto standby
REMOTE CONTROL	Bluetooth, 2.4 GHz
COMPASS	Electronic, degrees

POWER

BATTERY	1 × CR123A or optional battery pack
RUN TIME	At 22 °C: 3 h on CR123A · 10 h on the battery pack

10 SPECIFICATIONS

PHYSICAL	
FITS	PVS-14 (RNVG, DTNVS, 1431), L3Harris BNVD (PVS-31A, GPNVG)
BRACKET	Objective lens 36.5 to 37.5 mm
FUSION DISTANCE	10 m minimum
TEMPERATURE	−40 °C to +60 °C (−40 °F to +140 °F)
WEIGHT	77 g (2.65 oz) with battery · 62 g (2.12 oz) without
DIMENSIONS	86 × 65 × 40 mm (3.4 × 2.6 × 1.6 in)
WATERPROOF	1.5 m for 30 min

11 TROUBLESHOOTING

PROBLEM	CAUSE · ACTION
DOES NOT SWITCH ON	Low battery or cover not installed correctly Use a CR123A above 2.8 V. Install the cover correctly. Remove dirt from the battery compartment.
NO PICTURE	FTO off, scene too bright or Dormancy on Install a new battery correctly. Switch on the battery pack. Switch off Dormancy.
BRACKET DOES NOT TIGHTEN	Lens diameter out of range Use an NVD with a 36.5 to 37.5 mm objective lens. Turn the buckle to adjust.
TARGET NOT FUSED	Target too close Look at targets farther away. Minimum fusion distance is 10 m.
REMOTE DOES NOT WORK	Battery, pairing or distance No light when you press PWR: replace the CR2032. Pair again (see 04). Stay within 1 m.
PICTURE GRAINY OR UNEVEN	Shutter correction needed Press **PWR**, or set Auto correction to on.
MENU SHARP, PICTURE BLURRED	Dust on the optics Clean the outer lens surfaces with the microfibre cloth.

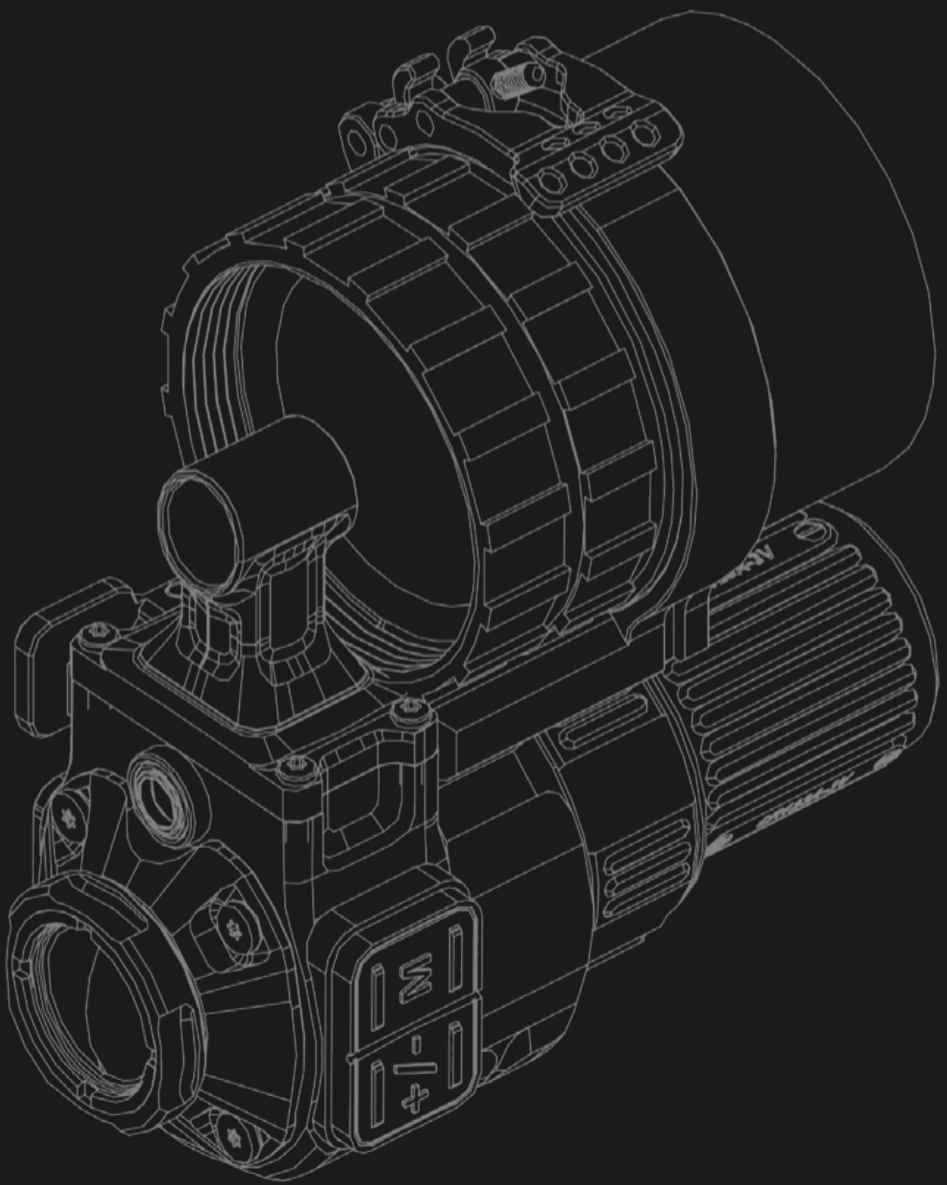

FALCONCLAW

falconclaw.eu
contact@falconclaw.eu

© 2026 Falconclaw. Specifications can change without notice.